Control Thermostats RAK-TR.1...

Electromechanical TR

- **2-position control thermostat with single-pole changeover microswitch**
- **Switching capacity contact connection 1-2: 10 (2.5) A, AC 250 V, (DIN3440)**
  contact connection 1-3: 6 (2.5) A, AC 250 V
- **Time constant conforming to DIN 3440**
- **3 mounting choices: pipe, pocket or wall mounting**
- **External setting knob for setpoint adjustment**

Use

Typical applications:

- Heat generation plant
- For general use in heating, ventilation and air conditioning plant

Function

Changeover switch (S.P.D.T.)

When the setpoint is reached on rising temperature, contact connection 1-2 changes over to contact connection 1-3. When the themperature of the medium falls by the value of the switching differential, the control termostat reverts to contact connection 1-2.

Changeover contact TR version

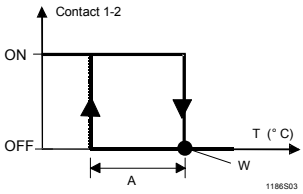

W: Setpoint
A: Switching differential

Type summary

Standard set	Temperature setting range	Capillary tube length	Scope of delivery	Pocket length [1)]
RAK-TR.1000B	15...95 °C	700 mm	Pocket (for RAK….B) / Clamping band for max. pipe dia. 100 mm /Cable gland M16x1.5 mm / Mounting instructions	100 mm
RAK-TR.1000S	15...95 °C			---
RAK-TR.1210B	15...82 °C			100 mm

1) Pocket ALT-SB100, brass nickel-plated, PN10

Accessories

Refer to Data Sheets N1193 and N1194.

Ordering

When ordering, please give type reference according to “Type summary“ (standard set).

If the accessories required are not those included in the standard set, they can be ordered separately according to the type references given in Data Sheets N1193 and N1194.

Mechanical design

Housing

The base of the thermostat is made of PA (reinforced) and is designed for pipe, pocket or wall mounting; the electromechanical control thermostat (TR) uses a capillary type sensing element.

The cover is made of ABS + PC and accommodates the freely accessible setpoint setting knob.

The cable gland is M16x1.5 mm.

Notes

Mounting aid

Installation Instructions are enclosed in the package.

Mounting location

It must be ensured that there is sufficient clearance above the thermostat for adjusting the setpoint and for removing and replacing the thermostat, if required.

Pipe mounting

The clamping band should be properly tightened to ensure the entire length of the sensing element is in close contact with the pipe’s surface.

Protection pocket mounting

Mount the pocket and adjust the hexagon as required. Immerse the capillary sensing element in the pocket and secure the base to the pocket by means of the screw.

Wall mounting with sensing element in the pocket

To prepare for wall mounting, knock out the fixing holes in the housing and pull out the capillary tube until the required length is reached. After immersing the capillary sensing element in the pocket, secure it with a clamp (mounting accessories).

⚠ Wiring

The appliance must be wired by the installer only.
The cables used must meet the insulation requirements for mains voltage.
Wire the thermostat according to the connection diagram and in compliance with local regulations.

⚠ Max. AC 250 V

Caution: prior to opening the housing, disconnect the thermostat from the mains supply.

⚠ ⏚

Earth connections must be made in compliance with the regulations.

Technical data

Switching mechanism	Switching capacity	
	Nominal voltage	AC 24…250 V
	Nominal current I (I_M)	
	contact connection 1-2	0.1... 10 (2.5) A
	contact connection 1-3	0.1… 6 (2.5) A
	External fuse	10 A
	Life expectancy at nominal rating: Contact 1-2	min. 250'000 switching cycles
	Contact 1-3	min. 100'000 switching cycles
	Safety class	I to EN 60 730
	Degree of protection:	IP 43 to EN 60 529
	Externally adjustable	
	temperature range RAK-TR.1000	15...95 °C
	temperature range RAK-TR.1210	15...82 °C
	Thermal switching differential	6 K (range dependent)
Standards	CE conformity	
	Electromagnetic compatibility directive	89/336/EEC
	Low voltage directive	73/23/EEC
	Pressure equipment directive	97/23/EEC (CE 0497)
	ENEC (European Norms Electrical Certification)	
	C-tick	N474
	DIN3440	TR 113902
		Working contact 1-2: 10(2.5) A
	Product standards	
	Automatic electrical controls for household and similar use	EN 60 730-1
	Special requirements placed on temperature-dependent controls	EN 60 730-2-9
	Type 1 action	BL
	Radio interference protection	click rate N ≤5 to EN 55 014
Environmental conditions	Operation	class 3K5 to IEC 60 721-3-3
	Max. temperature on bulb	max. setpoint + 25 K
	Ambient temperature at the housing	max. 50 °C (T50)
	Humidity	< 95 % r.h.
	Mechanism	class 3M2 to IEC 60 721-3-3
	Storage and transport	class 2K3 to IEC 60 721-3-2
	Ambient temperature	-25…+70 °C
	Humidity	< 95 % r.h.
	Max. temperature socket	135 °C
	Degree of pollution	normal to EN 60 730
	Controlled medium	Water, oil
	Influence of the ambient temperature	-0.18 °C/°C
Calibration	Calibration temperature	max. setpoint
	Manufacturing deviation	±3 °C
	Drift after life expectancy	< ±5 %
	Calibrated for ambient temperature at the switching mechanism and capillary tube	20 °C to DIN 3440
	Time constant in: water	<45 s to DIN 3440
	oil	<60 s to DIN 3440
	air	<120 s to DIN 3440

Connections	Electrical connections	screw terminals for wires 2 x 0.75...1.5 mm²
	Earth connection	screw terminal for wires 2 x 0.75...1.5 mm²
	Cable gland	M16 x 1.5 mm (for max. 4-core cable)
	External wiring flexible cord	Type M attachment (designed to be connected with prepared conductors, e.g. ferrules)
General data	Housing colors	base RAL 7001 (dark-grey) cover RAL 7035 (light-grey)
	Dimensions of sensing element	6.5 mm dia. x 87 mm
	Capillary length	700 mm
	Min. bending radius of capillary	R min. = 5 mm
	Construction	
	Carrier of switching mechanism	plastic
	Capillary tube and sensing element	copper
	Diaphragm	stainless steel
	Contacts	Ag.1000/1000 (silver)
	Weight of standard set: RAK...B	0.33 kg
	RAK...S	0.27 kg

Connection diagram

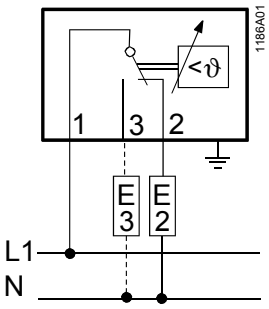

Dimensions

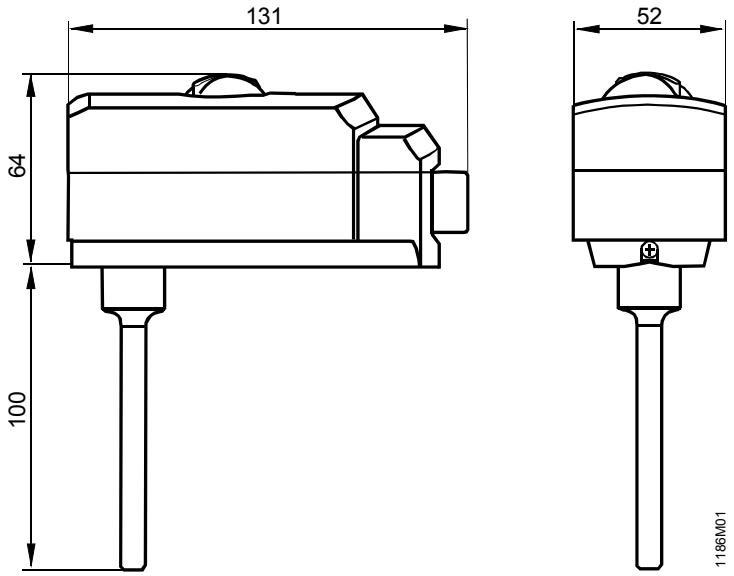

Subject to alteration